RoHS

SPECIFICATIONS
Rated Current:2.0AMP
Contact Resistance:30mΩ Max
Withstand Voltage:1000V AC/DC
Insulation Resistance:1000MΩ Min
Operation Temperature:−40°c to +105°c

Contact Material:Brass
Contact Plating:Au or Sn Over Ni
Insulator Material:Polyester(UL94V−0)
Standard: PBT
Max.Processing Temp: 180°C for 30−60 seconds
(200°C for 10 seconds)

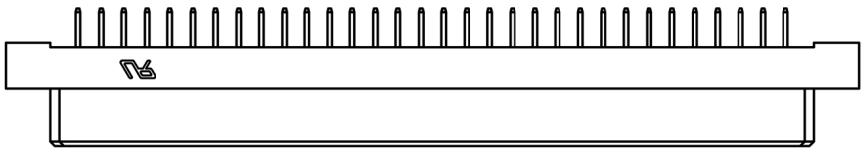

Recommended P.C.B Layout(Top Side)
(PCB BOARD TOLERANCE±0.05)

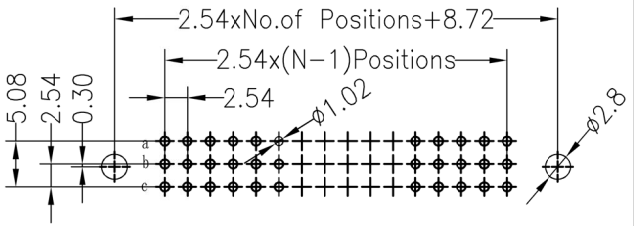

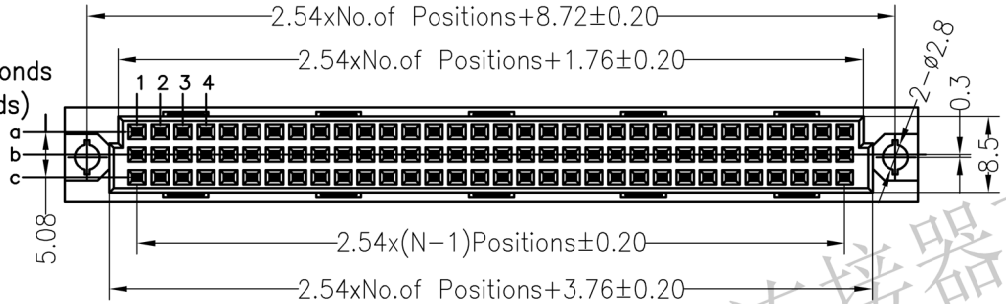

注:3*16P缺第4,5,6,11,12,13排

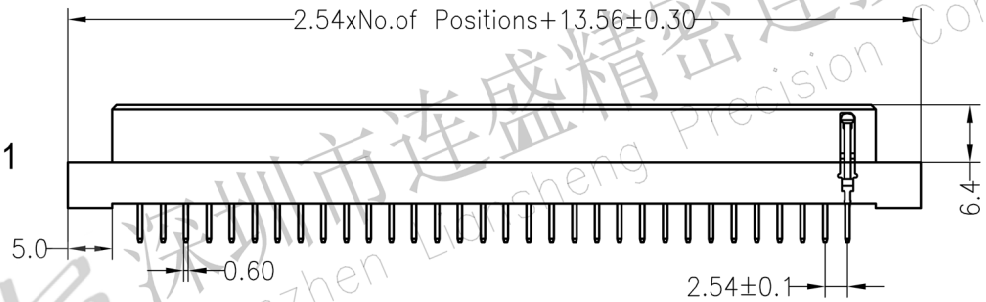

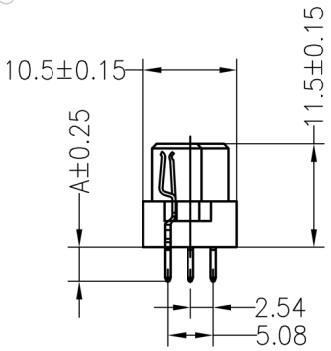

Ordering Information

3511 3 XX A F S XX B N A1

- XX: No.of Pins 30~96P
- F: Contact Type F=Female
- XX: Contact Plating
  - G0:Gold Flash
  - S0:Gold Flash/Tin
  - S2:2U" Gold
  - S3:10U" Gold
  - S4:15U" Gold
  - S5:30U" Gold
  - SN:Tin

Dimension antitheses list	
ITEM	A
Standard	4.00
Alternate	

深圳市连盛精密连接器有限公司
Shenzhen Liansheng Precision Connector Co., Ltd.

REV	DATE	MODIFICATION DESCRIPTION	CHANGE
C	2016.05.16	编码更新，A尺寸为4.0	
B	2014.09.16	增加UL标识	
A0	2012.04.10	NEW DRAWING	

OPERATION				
DRAW			SCALE	FIT
X.X	±0.30		UNIT	mm
X.XX	±0.20	CHECK	SIZE	A4
X.XXX	±0.10		SHEET	1/1
Angle	±3°	APPROVE	PROJ.	
DIM	TOL			

深圳市连盛精密连接器有限公司
Shenzhen Liansheng Precision Connector Co., Ltd.

PART NO.

TITLE: 欧式插座 母座 180度 3xNPIN 成品系列图