RoHS

SPECIFICATIONS
Rated Current:1.0AMP
Contact Resistance:20mΩ Max
Withstand Voltage:500V AC/DC
Insulation Resistance:1000MΩ Min
Operation Temperature:−40°c to +105°c

Contact Material:Brass
Contact Plating:Au or Sn Over Ni
Insulator Material:Polyester(UL94V−0)
Standard: PA6T
Max.Processing Temp: 230°C for 30−60 seconds
(260°C for 10 seconds)

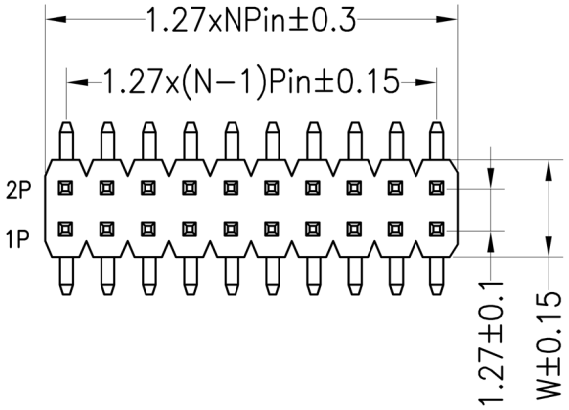

Recommended P.C.B Layout(Top Side)
(PCB BOARD TOLERANCE±0.05)

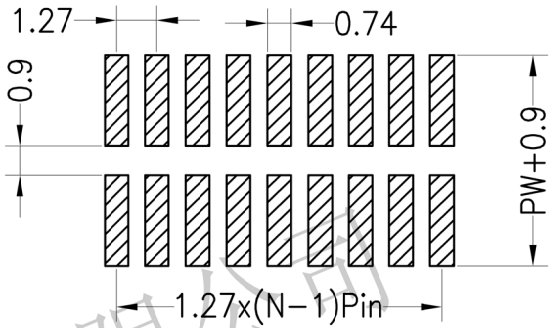

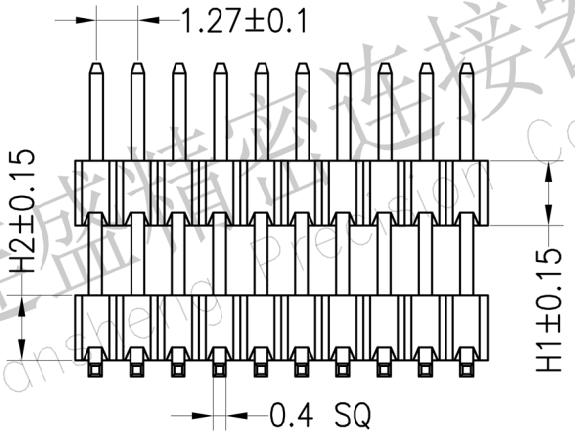

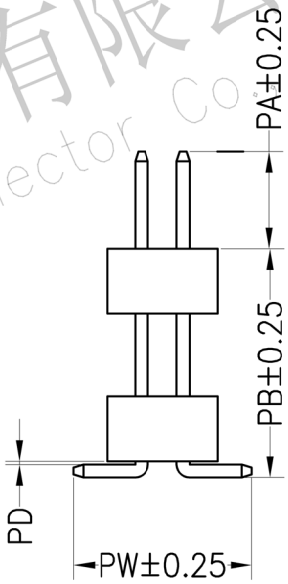

Ordering Information

P	X	X	X	XX	X	X	XX	X	XXXX
产品类型 P=排针	间距 1=1.27 2=2.0 3=2.54 4=3.96	塑胶高度 A=1.0 B=1.5 C=2.0 D=2.5	排数 1=单排 2=双排	单排PIN数 1~40P	产品形态 1=DIP 2=RA 3=SMT 4=SH 5=蜈蚣脚	塑胶材料 1=PBT 2=LCP 3=PPS 4=PA46 5=PA6T 9=PA9T	电镀厚度 00=常规 01=1u" 02=2u" 03=3u"	包装方式 1=管装 2=卷装 3=盘装 4=袋装 5=盒装	序列号

Dimension antitheses list

ITEM	PA	PB	PW	PD	H1/H2	W
001	4.00	7.50	5.50	0.10	1.0/1.5/2.0/2.5	3.4/3.0
Alternate						

REV	DATE	MODIFICATION DESCRIPTION	CHANGE
A0	2012.04.19	NEW DRAWING	

OPERATION	
X.X	±0.30
X.XX	±0.20
X.XXX	±0.10
Angle	±3°
DIM	TOL

DRAW
CHECK
APPROVE

SCALE	FIT
UNIT	mm
SIZE	A4
SHEET	1/1
PROJ.	

深圳市连盛精密连接器有限公司
Shenzhen Liansheng Precision Connector Co., Ltd.

PART NO.

TITLE: 1.27PH 2XNP 双塑 SMT

深圳市连盛精密连接器有限公司
Shenzhen Liansheng Precision Connector Co., Ltd.