RoHS

MATERIAL:
CAGE: NICKEL SILVER,THICKNESS 0.25MM.
CONNECTOR:
PLASTIC HOUSING:HIGH TEMPERATURE LCP,UL94V-0.
SPRING:STAINLESS STEEL,THICKNESS 0.20MM.
CONTACTS:PHOSPHOR BRONZE,THICKNESS 0.20MM.
PLATING:15U" MIN.GOLD ON MATING AREA,
150U" MIN. MATE TIN ON SOLDER TAILS.
TEMPERATURE RANGE: -40 ～+85 .

Recommended P.C.B Layout(Top Side)
(PCB BOARD TOLERANCE±0.05)

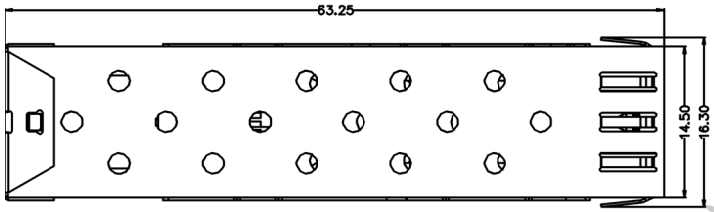

TOP VIEW

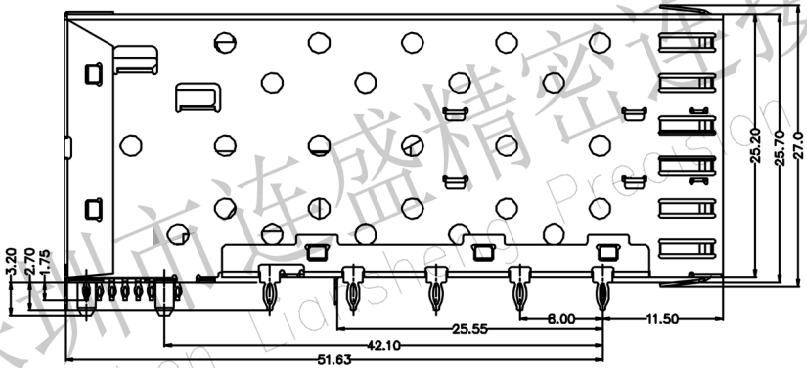

FRONT VIEW

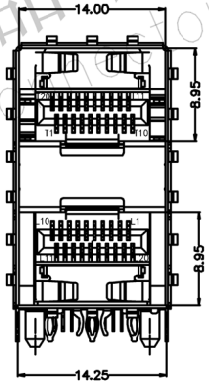

RIGHT SIDE VIEW

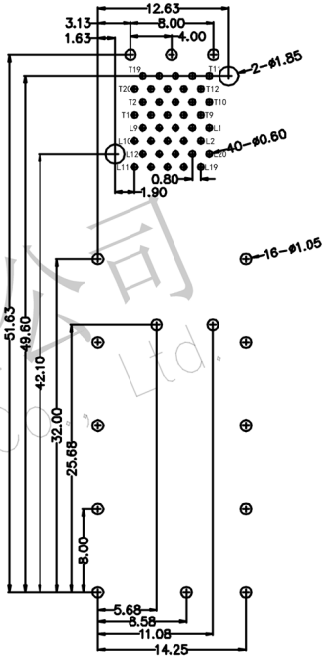

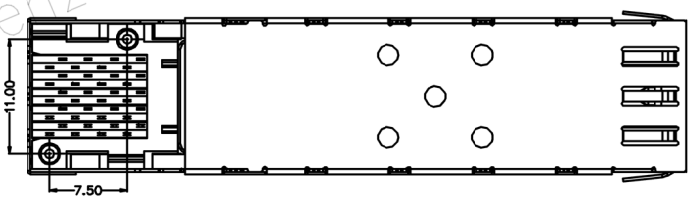

BOTTOM VIEW

深圳市连盛精密连接器有限公司
Shenzhen Liansheng Precision Connector Co., Ltd.

REV	DATE	MODIFICATION DESCRIPTION	CHANGE
A0	2012.03.28	NEW DRAWING	

OPERATION			
X.X	±0.30	DRAW	
X.XX	±0.20	CHECK	
X.XXX	±0.10	APPROVE	
Angle	±3°		
DIM	TOL		

SCALE	FIT
UNIT	mm
SIZE	A4
SHEET	1/1
PROJ.	

深圳市连盛精密连接器有限公司
Shenzhen Liansheng Precision Connector Co., Ltd.

PART NO.

TITLE: